Part 1

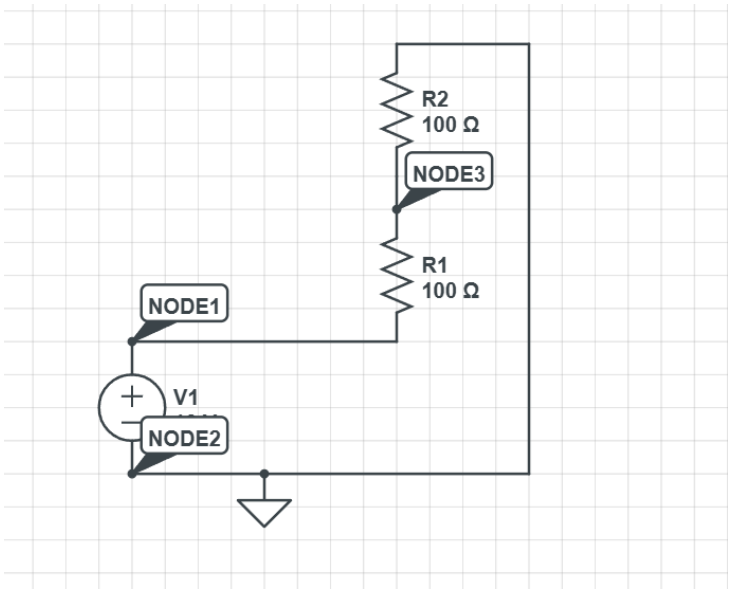

1. a)

Node 1: 10V
Node 2: 0V
Node 3: 5V
Current: 50mA

d)

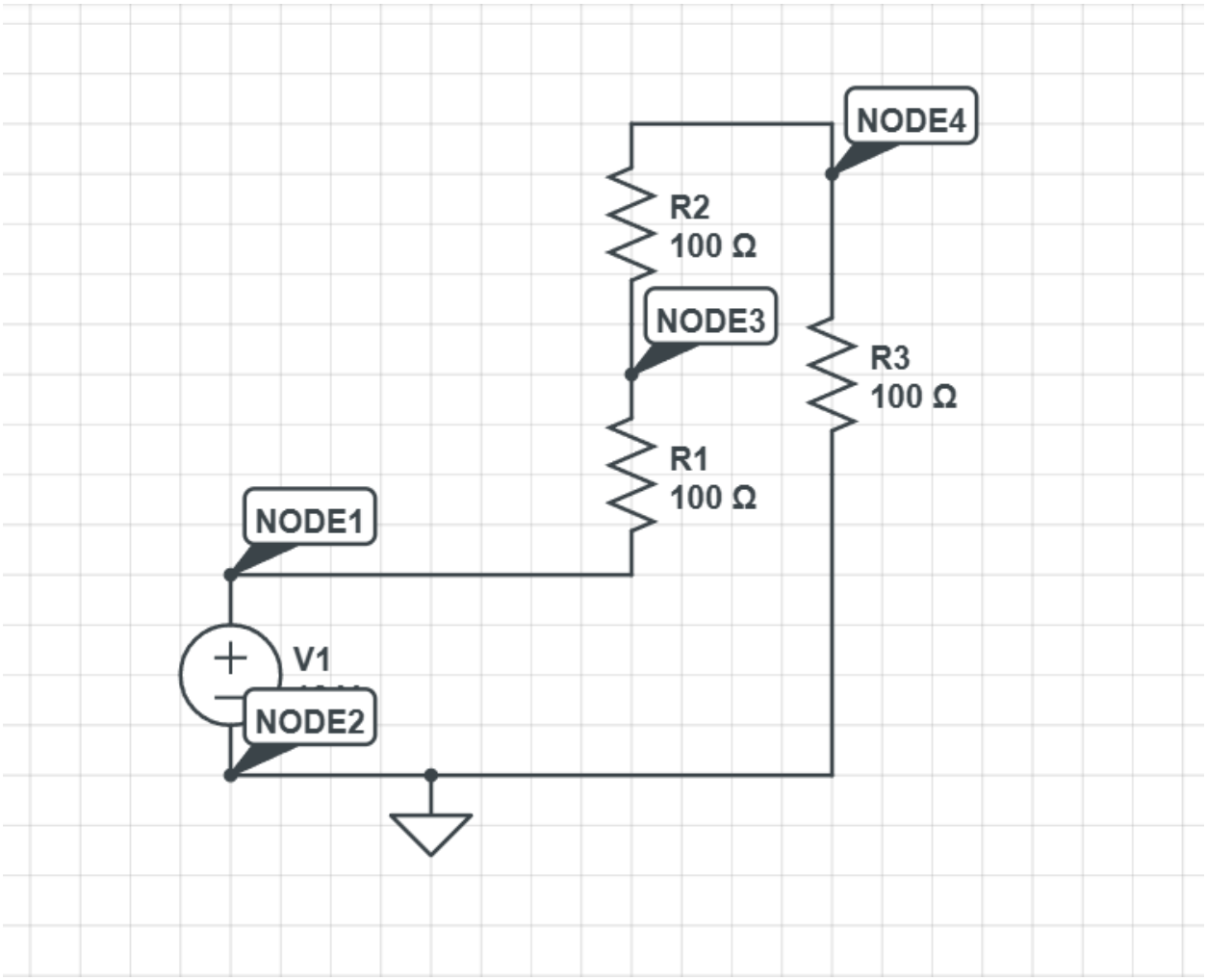

Node 1: 10V
Node 2: 0V
Node 3: 6.67 V
Node 4: 3.33 V
Current: 33.33 mA

R=100ohm, C=1mF

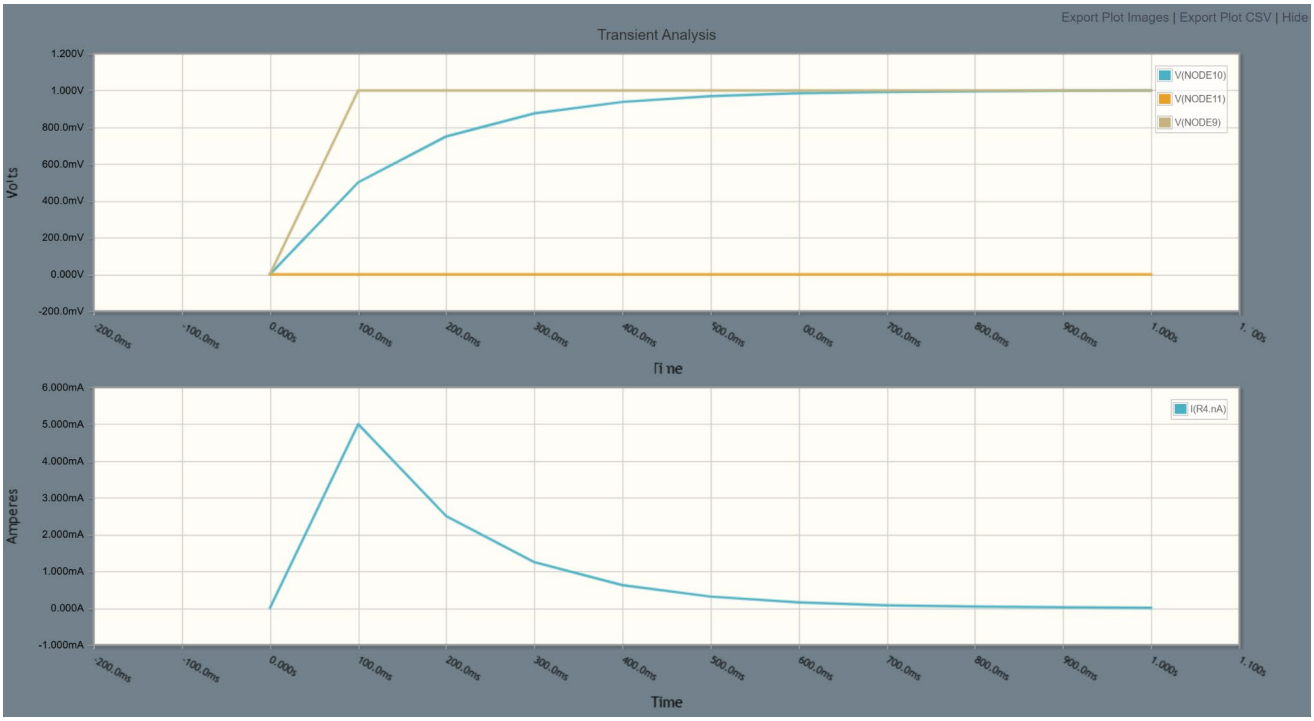

R=5kohm, C=10uF

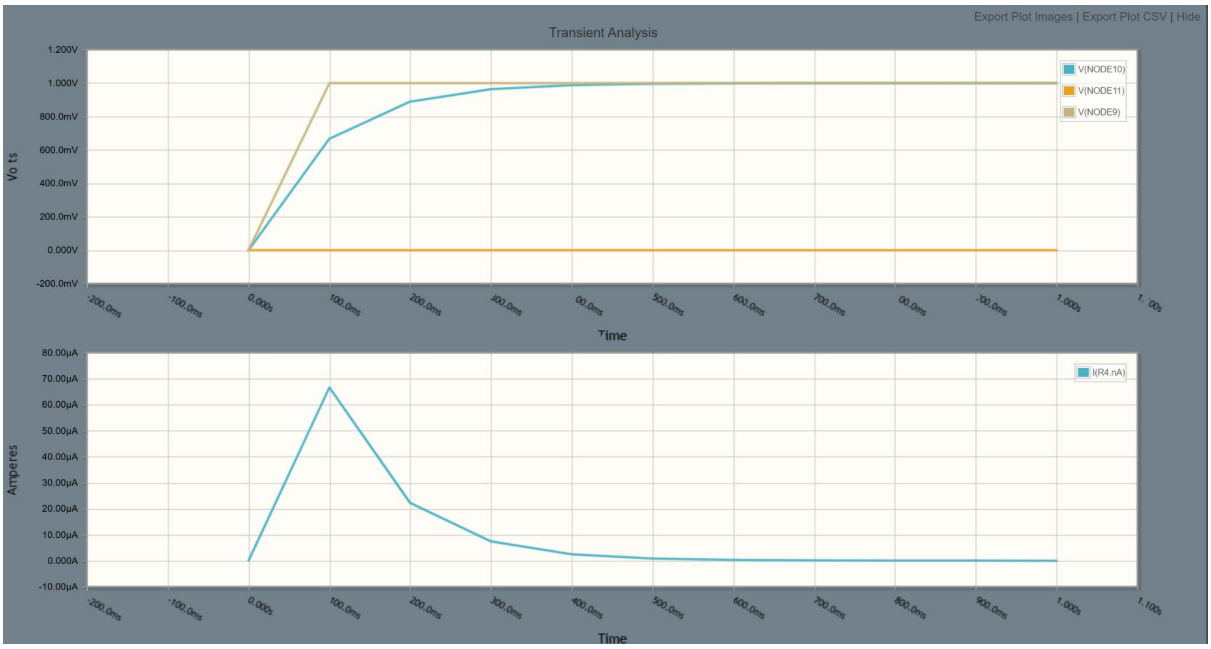

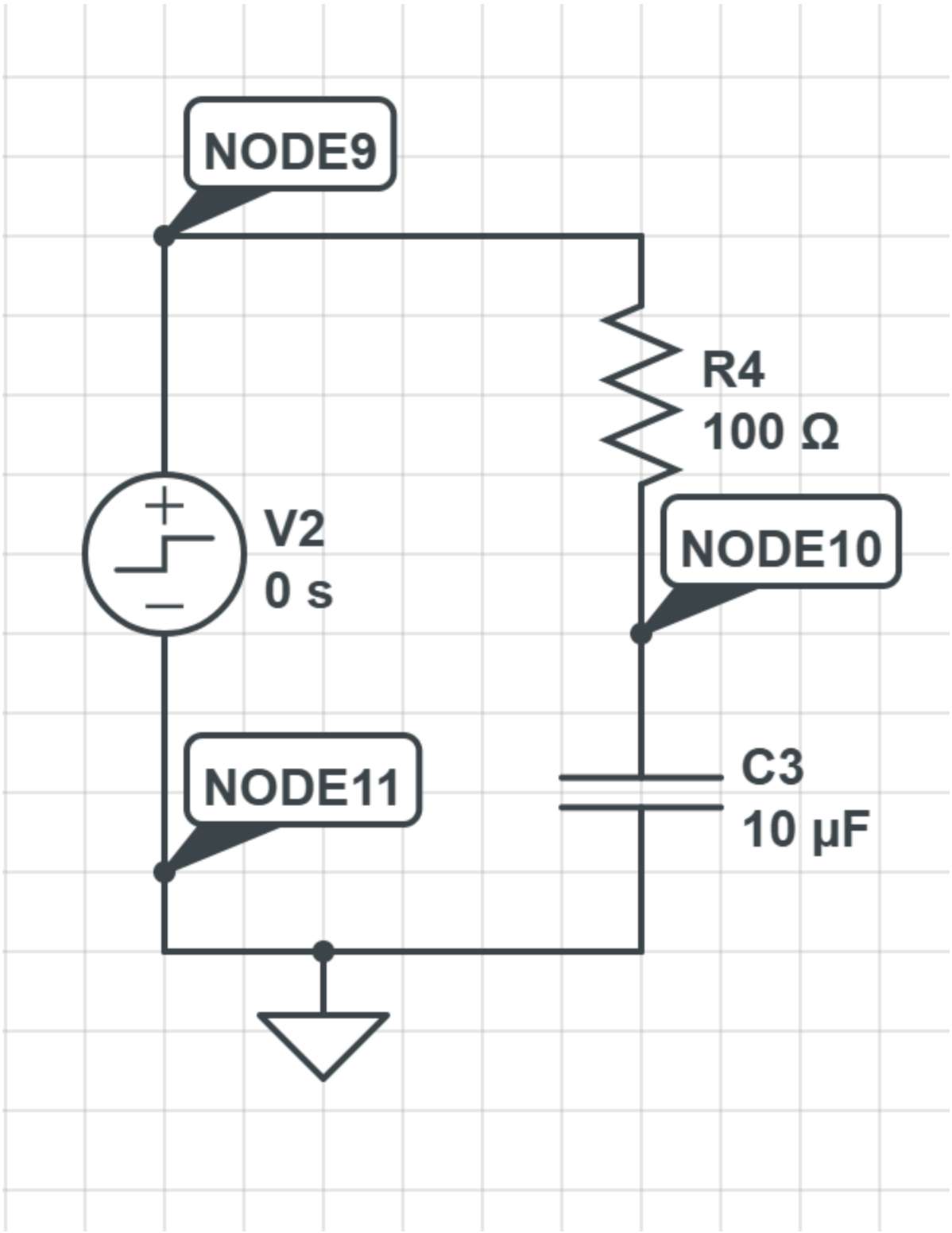

Original: R=100ohm, C=10uF

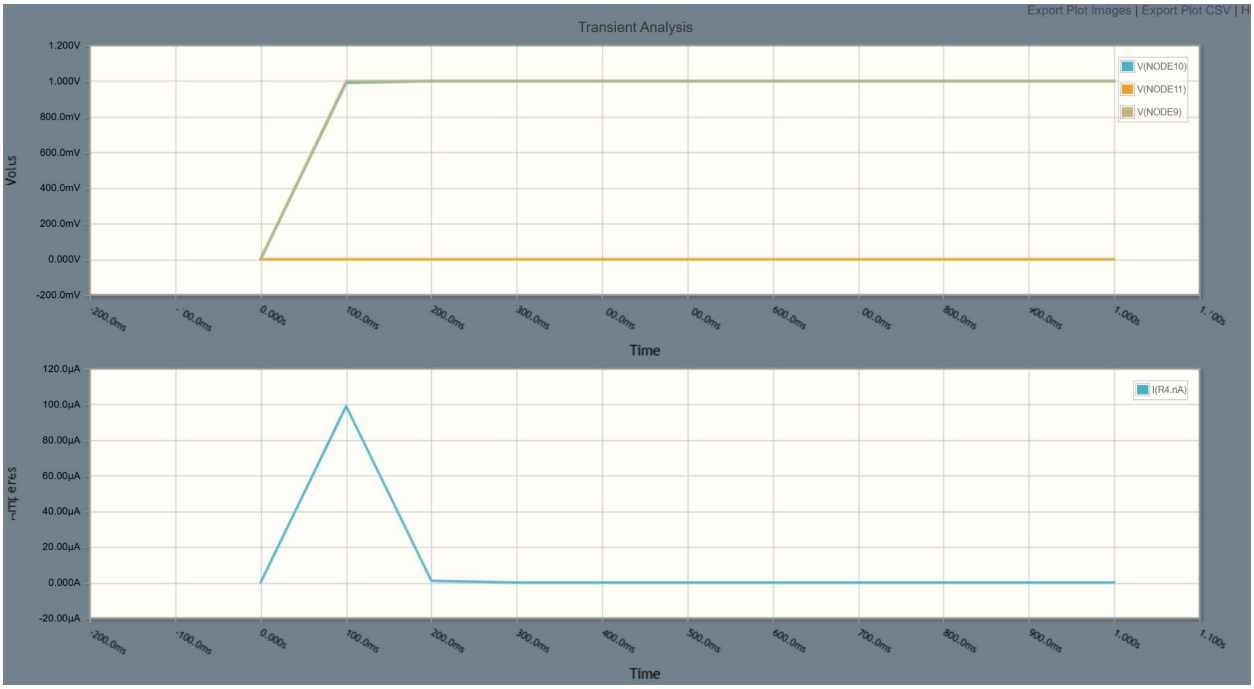
Export Plot Images | Export Plot CSV | H
Transient Analysis
Volts
1.200V
1.000V
800.0mV
600.0mV
400.0mV
200.0mV
0.000V
-200.0mV
V(NODE10)
V(NODE11)
V(NODE9)
-200.0ms
0.000s
100.0ms
200.0ms
300.0ms
600.0ms
800.0ms
1.000s
Time
120.0µA
100.0µA
80.00µA
60.00µA
40.00µA
20.00µA
0.000A
-20.00µA
I(R4.nA)
-200.0ms
-100.0ms
0.000s
100.0ms
200.0ms
300.0ms
400.0ms
500.0ms
600.0ms
700.0ms
800.0ms
900.0ms
1.000s
1.100s
Time

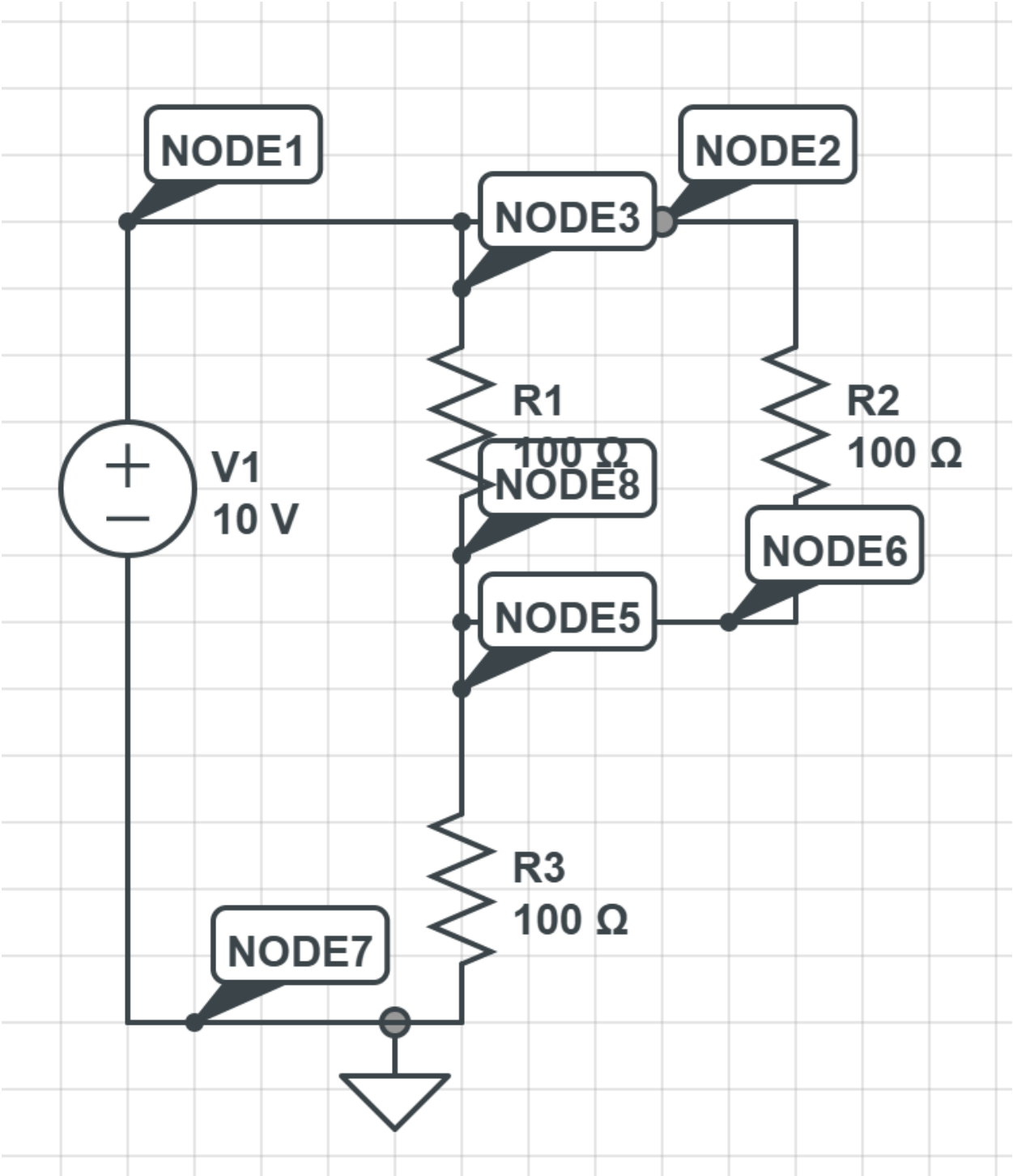
NODE1
NODE2
NODE3
R1
100 Ω
R2
100 Ω
V1
10 V
NODE8
NODE6
NODE5
R3
100 Ω
NODE7

5.

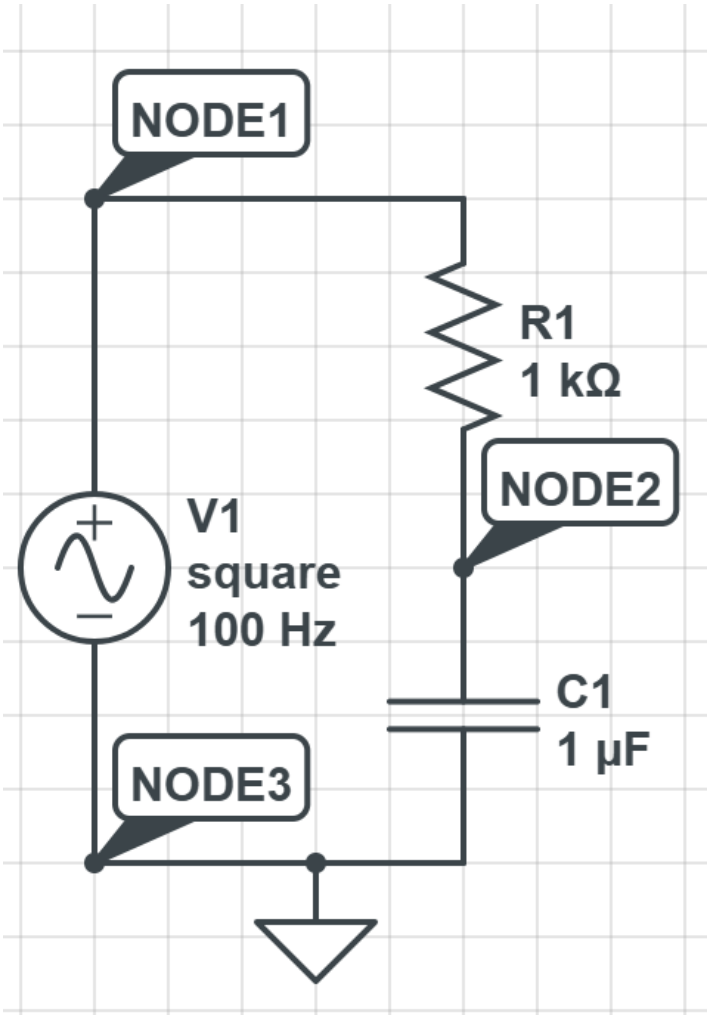

V1=10V, 100Hz, R1=100ohm, C1=1uF

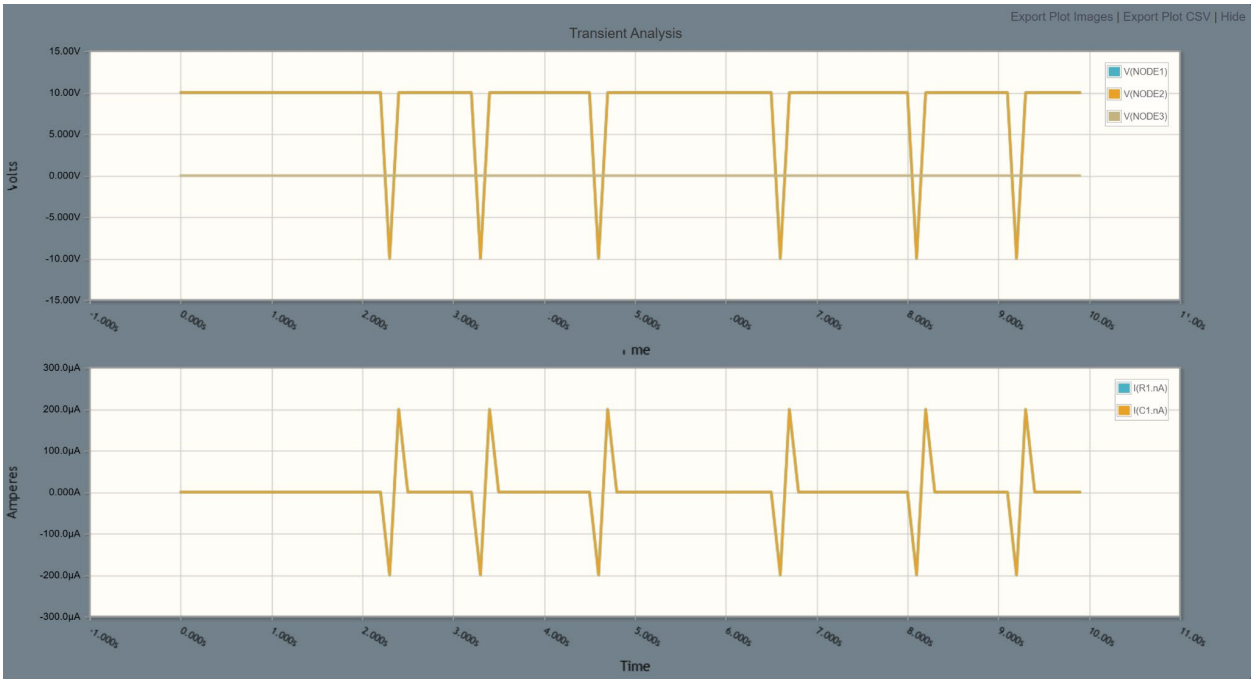

Increase capacitance: C1=100uF

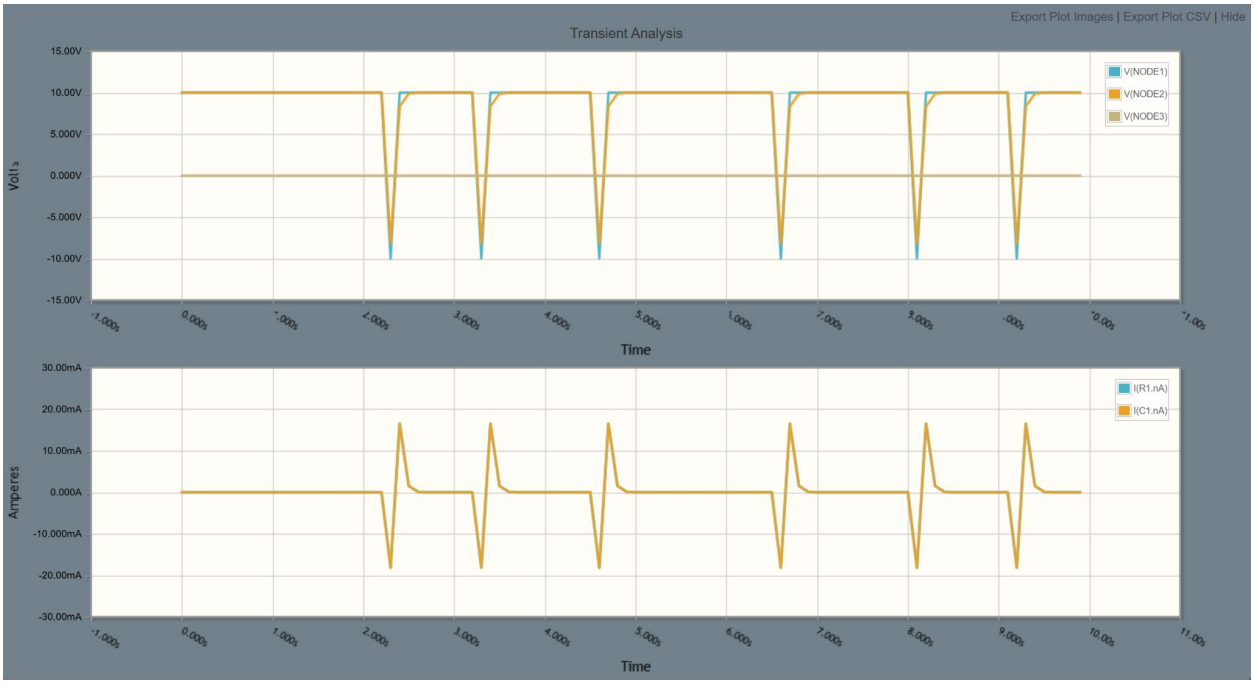

Increase frequency: V1=10V, 5000Hz, R1=100ohm, C1=100uF

Decrease frequency: V1=10V, 5Hz, R1=100ohm, C1=100uF

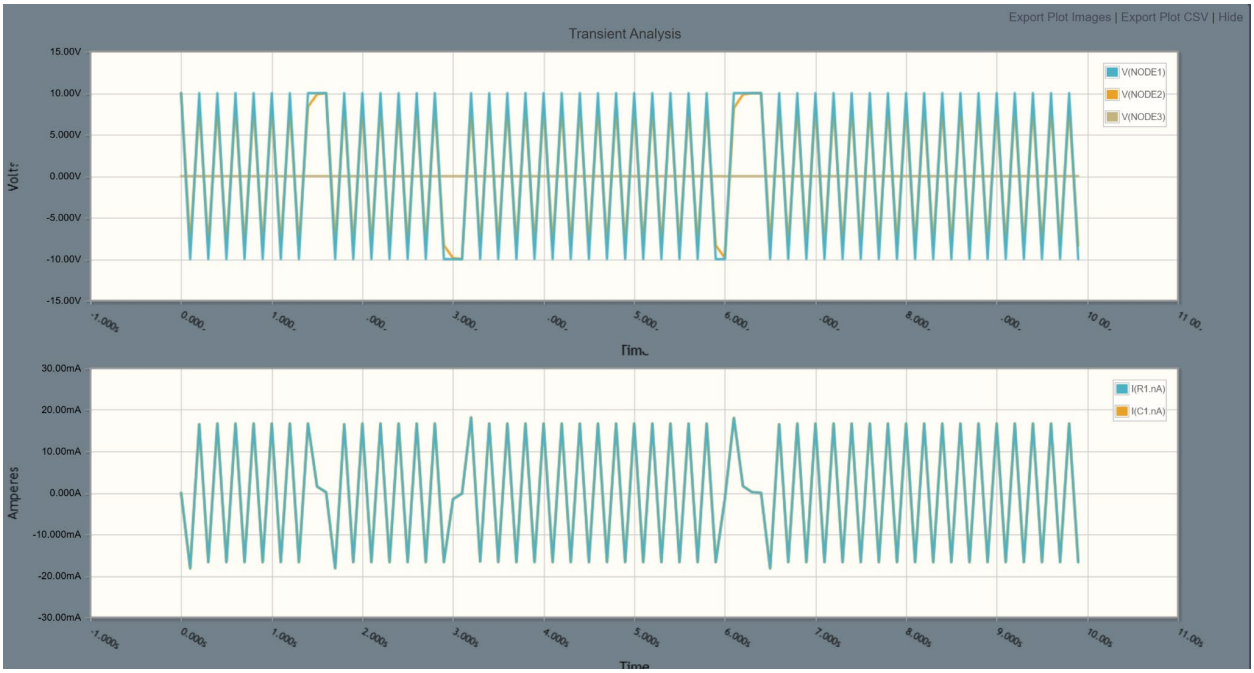

Part 2

6.

a. Turn on the Raspberry Pi (RPi)
b. The breadboard has two long columns on each side marked + and –. These are the power rails. The rows in the middle of the board are where you will place components. Each row of five holes is connected internally, so anything plugged into the same row is electrically connected.
c. Connect one of the 5V pins on the RPi to the + column on the breadboard
d. Connect one of the ground pins on the RPi to the – column on the breadboard
e. Run a connector from the + column to one row on the main part of the breadboard
f. Run a connector from the – column to a different (but close) row on the main part of the breadboard
g. If we connected a 1Ω resistor (don't try it!) between these two rows – so that it is in a closed loop with the 5V supply from the RPi, how much current would this circuit attempt to draw across the resistor?
It would draw 5A of current.
h. The RPi adaptor provides 5V and up to 2 Amps, is this current sufficient?
i. What do you think might happen? Please don't actually do this.
The power would be too high and it would damage the RPi or wires.
j. Connect a resistor of more than at least 500Ω between the two rows to make a complete circuit.
R=560Ω
k. Why is a higher resistance safer? What might happen to the resistor if it draws too much current?
l. Use your multi-meter to measure the voltage drop across the resistor. Is it what you expected?
5.04V
Yes, we're connecting it to the 5V pin, so we expect a voltage around 5.
NOTE: To measure voltage, connect the meter leads to the two sides of the component (in parallel with it). To measure current, you have to put the meter in series with the rest of the circuit – the current has to run through the meter. If your meter can measure current, try that as well

7. Building a real RC circuit
Now you are going to build a real version of the RC circuit you simulated in Part 1 and actually measure
the time constant.
e. Remove the single resistor from your breadboard circuit and replace it with a 10kΩ resistor and a 100uF capacitor in series. The resistor should connect to the +5V side and the capacitor should connect between the resistor and ground. Make sure the capacitor is oriented correctly – electrolytic capacitors (the tall cylindrical ones) have a marked negative side that should connect toward ground.
NOTE: The order of resistor and capacitor in the loop does not change the time constant, but

placing the resistor first and measuring voltage across the capacitor makes it easier to see the charging and discharging behavior.

f. Calculate the time constant for this circuit. With a 10kΩ resistor and a 100uF capacitor, what should τ be? This should be a familiar unit of time.

τ = RC = 10000*100e-6 = 1 s

g. Set your multi-meter to measure DC voltage and connect it across the capacitor (one lead on each side of the capacitor).

h. Disconnect the wire going from the + rail to the resistor. The capacitor should be fully discharged – the voltage across it should read 0V (or close to it). If it does not, briefly touch a connecting wire across the resistor+capacitor circuit, with the + rail disconnected, to discharge it.

Reads 0.04V

i. Now reconnect the wire from the + rail to the resistor and watch the voltage on the multi-meter. You should see the voltage rise from 0V toward 5V. Does it rise quickly at first and then slow down?

It rises quickly and slows down.

j. Once the capacitor is charged, disconnect the +5V wire from the resistor and instead connect that end of the resistor directly to the ground (–) rail. Watch the voltage reading. You should see it decay from ~5V back toward 0V.

k. Try to estimate how long it takes for the voltage to drop to about 37% of where it started (roughly 1.8V if it started at 5V). This time is one time constant. How does it compare to your calculation?

It was pretty quick so it was hard to tell the exact time, but it was about 1 second (1τ).

NOTE: 37% might seem like an odd number. It comes from the math behind the exponential decay – after exactly one time constant, the voltage has dropped to 1/e (about 37%) of its starting value. This is the same exponential behavior you saw in the simulation.

l. Try swapping in different resistor and capacitor values. For each combination, calculate the expected time constant first, then measure it. Try to pick values that give you time constants you can comfortably observe – too short and it will be hard to read the meter, too long and you will be waiting a while.

1mF*2kΩ = 2s (measured: ~2s)

1mF*47kΩ = 47s (measured: 45.6s)

m. How do your measurements compare to the values you calculated and to what you saw in the simulation? Are they exactly the same? If not, what might be causing any differences?

Not exactly the same, but it's hard to be precise with the timer and the multimeter and even harder to be precise with both together